保存日期:2019/5/18 15:14:45　　编制日期:2023/02/15

REV NO.	REVISION NOTE	REVISER	DATE
V0	NEW DRAWING		2023/02/15

客户编码	XX-XXX

打印日期:2023/6/9 10:23:32

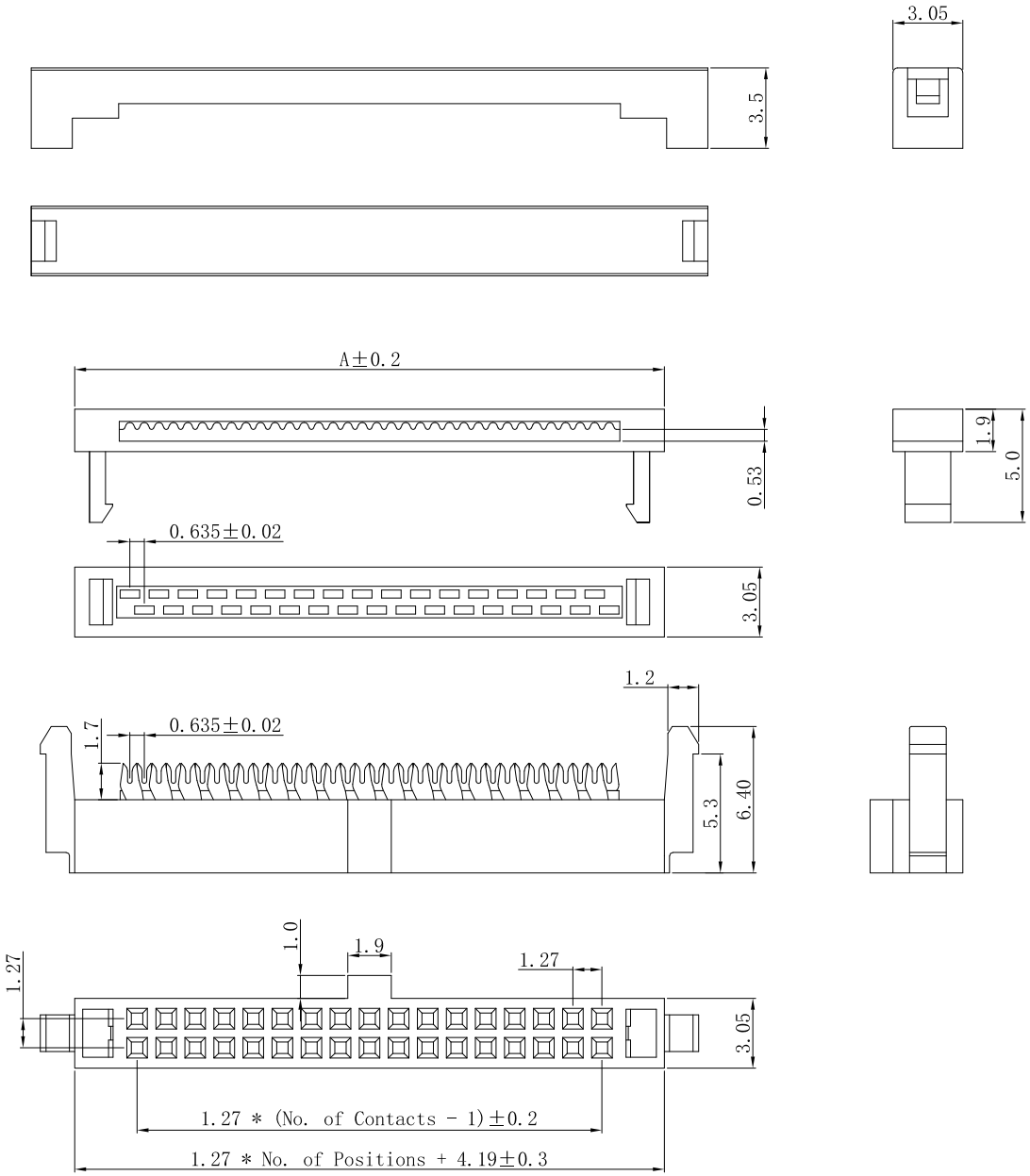

Specification:
Contact Resistance:20m Ohm Max.
Insulation Resistance:100M Ohm Min.
Current Rating:1A AC,DC.
Voltage Rating:250V AC,DC.
Withstanding Voltage:500V AC Min.
Temperature Range:-40° C TO 105° C

cisconn
Http://www.cisconn.com

深圳市新世联电子有限公司
TEL:+86(755)29912370　FAX:29912372

Tolerance Unless Otherwise Specified	Title	PH1.27 IDC 三件式 镀金			
.X ~ ±0.30		Units mm	Scale 4:1	REV NO. V0	Material No.
.XX ~ ±0.25					
.XXX ~ ±0.20	Drawing By LiuYang	Date 2023/02/15	Reviewed By	Date	Approvai By　Date
Angle ~ ± 3°					